EN7529CT Datasheet

Version: 1.3

Release date: 2021-07-02

© 2021 EcoNet (HK) Limited Taiwan Branch.
This document contains information that is proprietary to EcoNet (HK) Limited Taiwan Branch.
Unauthorized reproduction or disclosure of this information in whole or in part is strictly prohibited.

Specifications are subject to change without notice.

Contents

1 OVERVIEW 4
2 FEATURES 5
3 BLOCK DIAGRAM 6
4 Balls 7
4.1 Balls Map 7
4.2 Balls Descriptions 8
4.3 Pin Sharing Schemes 14
4.3.1 JTAG Sharing Scheme 14
4.3.2 SLIC ZSI/ISI Sharing Scheme 14
4.3.3 PCM Sharing Scheme 15
4.3.4 UART Sharing Scheme 15
4.3.5 SMI Sharing Scheme 15
4.3.6 PCIe Interface Sharing Scheme 16
4.3.7 Serial GPIO Interface Sharing Scheme 16
4.3.8 LED Interface Sharing Scheme 16
4.3.9 I2C Slave Interface Sharing Scheme 16
4.4 Boot Strap Pins Definition 17
5 Maximum Ratings and Operating Conditions 18
5.1 Absolute Maximum Ratings 18
5.2 Operating Conditions 18
5.3 Thermal Information 19
5.4 Storage Conditions 20
5.5 DC Electrical Characteristics 21
5.5.1 Supply Voltage and Current Consumption 21
5.5.2 3.3V I/O DC Characteristics 21
5.5.3 DDR3 I/O DC Characteristics 22
5.6 AC Electrical Characteristics 23
5.6.1 SPI Interface Signal Timing 23
5.6.2 MDC/MDIO Interface Signal Timing 24
5.6.3 PCM Interface Timing 25
5.6.4 I2C Interface Signal Timing 26
5.6.5 Crystal Specification 27
6 Packaging Physical Dimensions 29
6.1 LFBGA361 (15mm x 15mm x 1.4mm) 29
7 Ordering Information 30
8 History 31

This document contains information that is proprietary to EcoNet (HK) Limited Taiwan Branch.
Unauthorized reproduction or disclosure of this information in whole or in part is strictly prohibited.

Figures and Tables

Figure 3-1 EN7529CT Block Diagram....6
Figure 4-1 EN7529CT Ball Map....7
Figure 5-1 SPI Timing Diagram....23
Figure 5-2 MDC/MDIO Timing Diagram....24
Figure 5-3 PCM Interface Timing Diagram....25
Figure 5-4 I2C Interface Timing Diagram....26
Figure 5-5 Crystal Circuit Diagram....27
Figure 6-1 Package Outline Diagram....29

Table 4-1 Balls Descriptions....8
Table 4-2 JTAG Pin Sharing Scheme....14
Table 4-3 ZSI Pin Sharing Scheme....14
Table 4-4 ISI Pin Sharing Scheme....14
Table 4-5 PCM Pin Sharing Scheme....15
Table 4-6 SLIC SPI Pin Sharing Scheme....15
Table 4-7 UART Pin Sharing Scheme....15
Table 4-8 SMI Pin Sharing Scheme....15
Table 4-9 PCIe Pin Sharing Scheme....16
Table 4-10 SIPO Pin Sharing Scheme....16
Table 4-11 LED Pin Sharing Scheme....16
Table 4-12 I2C Slave Pin Sharing Scheme....16
Table 4-13 Strap Pins Definition....17
Table 5-1 Supply Voltage and Current Consumption....21
Table 5-2 3.3V I/O DC Characteristics....21
Table 5-3 DDR I/O DC characteristics....22
Table 5-4 SPI Interface Timing....23
Table 5-5 MDC/MDIO Interface Timing....24
Table 5-6 PCM Interface Timing....25
Table 5-7 I2C Interface Timing....26
Table 5-8 Crystal Specification....27

This document contains information that is proprietary to EcoNet (HK) Limited Taiwan Branch.
Unauthorized reproduction or disclosure of this information in whole or in part is strictly prohibited.

1 OVERVIEW

EN7529CT is a highly integrated single-chip solution for xPON application. It integrates four Ethernet GPHYs, one DDR3 controller, one USB3.0 host, one USB2.0 host, two PCIe Gen2 ports, and also a PCM controller with ISI/ZSI compatible interface for VoIP application, so that fully meets future smart home gateway requirements.

EN7529CT features a 1.0GHz ARM CA53 dual-core CPU and a powerful Xmart Packet Accelerator (XPA), which can support unmatched network features with extremely high packet processing capability. With XPA, EN7529CT performs an advanced QoS, security and flexible protocol management. EN7529CT also integrate three proprietary RISC-V cores to accelerate WiFi and security applications. By leading power-saving technology, EN7529CT makes system board design simple and easy, so as to provide unique solution with low system cost and ultra-low power consumption in the market.

This document contains information that is proprietary to EcoNet (HK) Limited Taiwan Branch.
Unauthorized reproduction or disclosure of this information in whole or in part is strictly prohibited.

2 FEATURES

- Highly integrated WAN interfaces
  - Compliant with ITU-T G.984/G.988 and IEEE802.3ah standards
  - One single chip solution designed for EPON/GPON application.
  - Support Active Ethernet
  - GPON support 32-TCONTs, 256 GEM port, with flexible GEM port to T-CONTs mapping mechanism, and status report/traffic monitor DBA mode
  - GPON support AES-128 decryption and encryption
  - EPON support 8 LLIDs, triple-churning decryption algorithm defined by CTC
  - Support PON rouge ONU detection, dying-gasp, Type-C optical protection switching
  - Providing MIB counters and sniffer function for quickly field debug purpose
- Un-matched and Xmart packet processing engine
  - Xmart packet accelerator can support wire-speed packet processing and forwarding capability without CPU's involvement
  - Support up to 32K flows, including L2 bridge, IPv4 NAT/Routing, IPv4 NAPT, IPv6 3/5-tuple routing, 6RD and DS-LITE, NPTv6, VxLAN, NVGRE
  - Powerful traffic classification engine parsing L2 to L4 header information
  - Flexible VLAN translation functions defined in TR-156 and CTC Spec.
  - Support L2 and L3 multicast streams and multicast VLAN translation
  - Configurable packet buffer location with efficient page-based link-list buffer management
  - Effective QoS scheme including per-flow TrTCM traffic shaping, SP/WRR/SP+WRR for traffic scheduling, tail-drop and RED for congestion handling
  - Support up to 16K jumbo frame
- Highly integrated LAN interfaces
  - x4 GEPHY
  - x3 HSGMII combo with PCIE/USB SerDes.
- Powerful SoC platform
  - 1.0GHz ARM CA53 dual-core CPU, 256K L2 cache
  - Integrate three proprietary RISC-V cores for WiFi and security acceleration
  - Support up to 1GB DDR3-1866 SDRAM
  - Support SPI NOR/NAND flash
  - Two PCIe Gen2 interfaces for dual-band WiFi application
  - One USB3.0 interface and one USB 2.0 interface
  - Provide one PCM or two ZSI/ISI interfaces
  - Built-in crypto engine for security application
  - Two UARTs
  - One I2C master and one I2C slave

This document contains information that is proprietary to EcoNet (HK) Limited Taiwan Branch.
Unauthorized reproduction or disclosure of this information in whole or in part is strictly prohibited.

3 BLOCK DIAGRAM

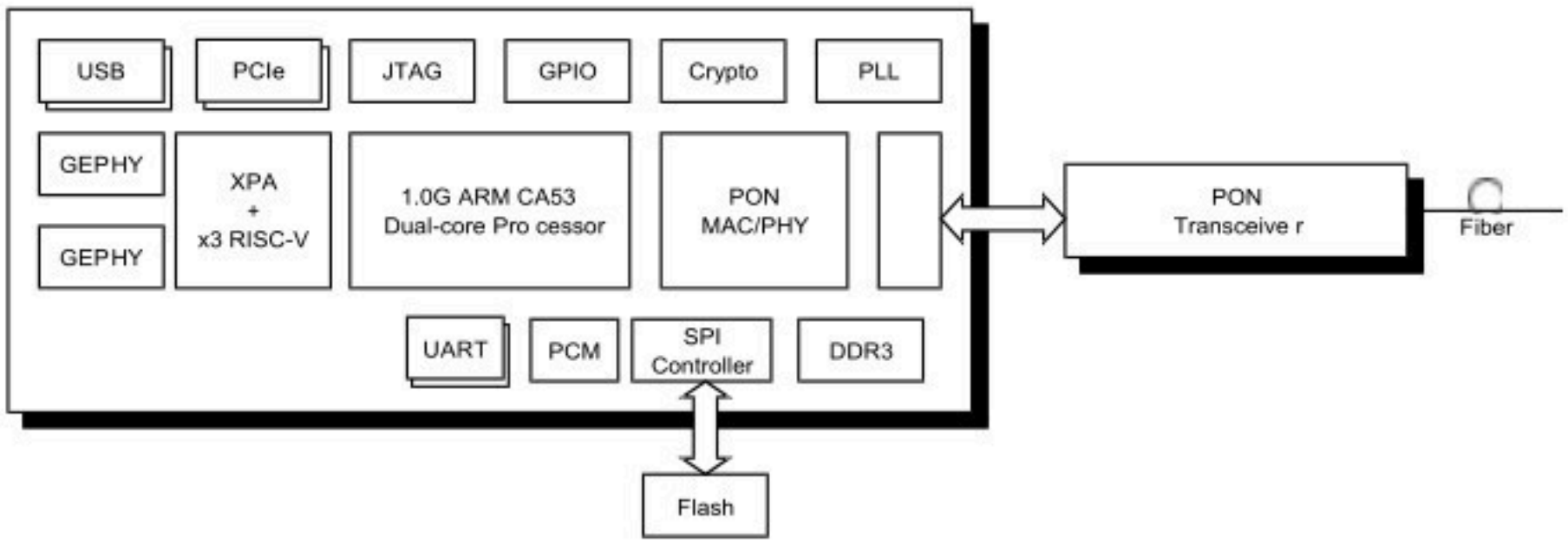

Figure 3-1 EN7529CT Block Diagram

SerDes Configuration

SerDes Name	Mode
PON SerDes	PON/HSGMII/5GBASE-R
PCIe Gen2 SerDes	PCIe Gen2/HSGMII
USB3 SerDes	USB3/HSGMII

This document contains information that is proprietary to EcoNet (HK) Limited Taiwan Branch.
Unauthorized reproduction or disclosure of this information in whole or in part is strictly prohibited.

4 Balls

4.1 Balls Map

	1	2	3	4	5	6	7	8	9	10	11	12	13	14	15	16	17	18	19	20	21	22	23	
A	GND		GND		GND		GND		GND		GND		GND		GND		GND	REF_CK0		AVSSK_PON	PON_RXP		GND	A
B	TXVN_D_P3	TXVP_D_P3	TXVP_C_P3	TXVP_B_P3	TXVP_A_P3	TXVP_D_P2	TXVP_C_P2	TXVP_B_P2	TXVP_A_P2	TXVP_D_P1	TXVP_C_P1	TXVP_B_P1	TXVP_A_P1	TXVP_D_P0	TXVP_C_P0	TXVP_B_P0	TXVP_A_P0	GND	GPIO27		PON_RXN	PON_TXP	PON_TXN	B
C	GBE_REXT	GND	TXVN_C_P3	TXVN_B_P3	TXVN_A_P3	TXVN_D_P2	TXVN_C_P2	TXVN_B_P2	TXVN_A_P2	TXVN_D_P1	TXVN_C_P1	TXVN_B_P1	TXVN_A_P1	TXVN_D_P0	TXVN_C_P0	TXVN_B_P0	TXVN_A_P0	EFUSE	PON_RX_SD	AVSSK_PON	AVSSK_PON	AVSSK_PON	AVDDK_PON	C
D	ZMISO	ZMOSI	GND		GND		GND	GND		GND	GND		GND	GND		GND	GND	GPIO0	PON_BURST_EN		GND	DQ5	DQ7	D
E		GPIO7	ZCLK		AVDD33_GBE			AVDD33_GBE	AVDD33_GBE			AVDD33_GBE	AVDD33_GBE			AVDD33_CKO	AVDD33_PON		NC_E19	NC_E20	DQ3	DQ1		E
F	GPIO5	GPIO4	GPIO6				AVDDK_GBE	AVDDK_GBE	AVDDK_GBE	AVDDK_GBE											DQ14	DQ10	GND	F
G	AVDD33_PCIE1	AVDD33_PCIE0	ZSYNC		DVDD33	DVDD33									DVDD33	DVDD33			DQS0	DQSB0	DQ8	GND		G
H	AVSSK_PCIE1	AVSSK_PCIE1					GND	GND	GND	GND	GND	GND	GND	VCCK			VCCK_DDR				DQM0	GND	DQ12	H
J	PCIE_TXP1	PCIE_TXN1	AVSSK_PCIE1			VCCK	GND	GND	GND	GND	GND	GND	GND	VCCK			VCCK_DDR		DQS1	DQSB1	GND	DQM1		J
K		PCIE_RXP1	PCIE_RXN1			VCCK	GND	GND	GND	GND	GND	GND	GND	VCCK			AVDD15_DDR_DQ				GND	DQ13	DQ15	K
L	PCIE_CKN1	PCIE_CKP1	AVSSK_PCIE1			VCCK		GND	GND	GND	GND	GND	GND	VCCK			AVDD15_DDR_DQ		CLK	CLKB	DQ11	DQ9		L
M		AVSSK_PCIE0	AVSSK_PCIE0			VCCK	GND	GND	GND	GND	GND	GND	GND	VCCK			AVDD15_DDR_DQ				DQ2	DQ0	GND	M
N	PCIE_TXN0	PCIE_TXP0	AVSSK_PCIE0			VCCK	GND	GND	GND	GND	GND	GND	GND				AVDD15_DDR_CK		RCS	RCKE	DQ6	GND		N
P		PCIE_RXN0	PCIE_RXP0			VCCK	GND	GND	GND	GND	GND	GND	GND				AVDD15_DDR_CA		RRAS	RCAS	RODT	GND	DQ4	P
R	PCIE_CKN0	PCIE_CKP0	AVSSK_PCIE0			VCCK	GND	GND	GND	GND	GND	GND	GND	VCCK			AVDD15_DDR_CA				GND	RBAD		R
T	AVSSK_PCIE0	AVSSK_PCIE0	AVDDK_PCIE0	AVDDK_PCIE1		VCCK	GND	GND		GND	GND	GND	GND	VCCK			AVDD33_RDDR				GND	RA3	RBA2	T
U			PCIE_RESETD	PCIE_RESET1	VCCK	VCCK	VCCK	VCCK	VCCK	VCCK	VCCK		VCCK	VCCK					RA11	RA15	RA7	RA5		U
V	HW_RSTN	UART_TXD	UART_RXD	VCCK	VCCK	VCCK										DVDD33	DDR_RTN	DDR_RTP	RA1	RA14	RA0	RA2	GND	V
W		GPIO11	GPIO9	VCCK	VCCK	VCCK		AVDD33_BGPOR	AVDD33_BGPOR	AVDD33_BGPOR	AVDD33_BGPOR			AVDD33_XTAL	VREFCA	VREFDQ					DDR_RESETB	GND		W
Y	GPIO8	GPIO10	VCCK	VCCK	VCCK															GND	RA13	GND	RA9	Y
AA	VCCK	VCCK	VCCK	VCCK	GPIO24	BGPOR_DGINP	AVSS33_BGPOR	XTAL_IN	AVSS33_BGPOR	USB_DP0	GND	SPI_MOSI	I2C_SCL	PON_TX_FAULT	PON_RX_DIS	AVDD33_USB	AVSSK_SSUSB	SSUSB_RXN	AVSSK_SSUSB	RA10	GND	RWE		AA
AB	VCCK	VCCK	GPIO23	GPIO2	GPIO26	AVSMON	BGPOR_TP	XTAL_OUT	AVSS33_BGPOR	USB_DM0	USB_DP1	SPI_MISO	I2C_SDA	SPI_CS	PON_TX_SD	AVDD33_SSUSB	SSUSB_TXP	SSUSB_RXP	AVSSK_SSUSB	RA12	RA4	RA6	RA8	AB
AC	GND	GPIO1	GPIO25	GPIO3	GPIO22		BGPOR_TN		AVSS33_BGPOR		USB_DM1		SPI_CLK		PON_TX_DIS		SSUSB_TXN		AVDDK_SSUSB		RBA1	GND	GND	AC
	1	2	3	4	5	6	7	8	9	10	11	12	13	14	15	16	17	18	19	20	21	22	23	

Figure 4-1 EN7529CT Ball Map

This document contains information that is proprietary to EcoNet (HK) Limited Taiwan Branch.
Unauthorized reproduction or disclosure of this information in whole or in part is strictly prohibited.

4.2 Balls Descriptions

Table 4-1 Balls Descriptions

Pin	Name	Type*	Description
Crystal			
AA8	XTAL_IN	I	Crystal input
AB8	XTAL_OUT	O	Crystal output
W14	AVDD33_XTAL	P	Crystal 3.3V power
SPI interface			
AB14	SPI_CS0	IO	SPI device chip selection
AC13	SPI_CLK	IO	SPI clock output
AB12	SPI_MISO	IO	SPI data Connected to SPI flash device DO (IO1) pin. For dual-mode SPI, this pin is SPI_DIO1.
AA12	SPI_MOSI	IO	SPI data Connected to SPI flash device DI (IO0) pin. For dual-mode SPI, this pin is SPI_DIO0.
UART interface			
V2	UART_TXD	O	UART transmit data output
V3	UART_RXD	I	UART receive data input
I2C interface			
AA13	I2C_SCL	IO	I2C clock
AB13	I2C_SDA	IO	I2C data
SLIC interface			
D2	ZMOSI	IO	ZSI data
E3	ZCLK	IO	ZSI clock
G3	ZSYNC	IO	ZSI sync
D1	ZMISO	IO	ZSI data
USB Port 0 interface			
AA16	AVDD33_USB	P	USB analog 3.3V power
AA10	USB_DP0	A	USB2.0 port 0 bus D+ signal
AB10	USB_DM0	A	USB2.0 port 0 bus D- signal
USB Port 1 Interface			
AA17, AA19, AB19	AVSSK_SSUSB	G	USB port 1 analog ground
AC19	AVDDK_SSUSB	P	USB port 1 analog core power
AB16	AVDD33_SSUSB	P	USB port 1 analog 3.3V power
AB11	USB_DP1	A	USB2.0 port 1 bus D+ signal
AC11	USB_DM1	A	USB2.0 port 1 bus D- signal
AB18	SSUSB_RXP	A	USB3.0 port 1 RX differential signal positive

This document contains information that is proprietary to EcoNet (HK) Limited Taiwan Branch.
Unauthorized reproduction or disclosure of this information in whole or in part is strictly prohibited.

Pin	Name	Type*	Description
AA18	SSUSB_RXN	A	USB3.0 port 1 RX differential signal negative
AB17	SSUSB_TXP	A	USB3.0 port 1 TX differential signal positive
AC17	SSUSB_TXN	A	USB3.0 port 1 TX differential signal negative
PCIE Port 0 interface			
M2, M3, N3, R3, T1, T2	AVSSK_PCIE0	G	PCIE port 0 analog ground
T3	AVDDK_PCIE0	P	PCIE port 0 analog core power
G2	AVDD33_PCIE0	P	PCIE port 0 analog 3.3V power
N2	PCIE_TXP0	A	PCIE port 0 TX differential output positive
N1	PCIE_TXN0	A	PCIE port 0 TX differential output negative
P3	PCIE_RXP0	A	PCIE port 0 RX differential input positive
P2	PCIE_RXN0	A	PCIE port 0 RX differential input negative
R2	PCIE_CKP0	A	PCIE port 0 differential clock output positive
R1	PCIE_CKN0	A	PCIE port 0 differential clock output negative
U3	PCIE_RESET0	O	PCIE port 0 reset output
PCIE Port 1 interface			
H1, H2, J3, L3	AVSSK_PCIE1	G	PCIE port 1 analog ground
T4	AVDDK_PCIE1	P	PCIE port 1 analog core power
G1	AVDD33_PCIE1	P	PCIE port 1 analog 3.3V power
J1	PCIE_TXP1	A	PCIE port 1 TX differential output positive
J2	PCIE_TXN1	A	PCIE port 1 TX differential output negative
K2	PCIE_RXP1	A	PCIE port 1 RX differential input positive
K3	PCIE_RXN1	A	PCIE port 1 RX differential input negative
L2	PCIE_CKP1	A	PCIE port 1 differential clock output positive
L1	PCIE_CKN1	A	PCIE port 1 differential clock output negative
U4	PCIE_RESET1	O	PCIE port 1 reset output
XPON interface			
E17	AVDD33_PON	P	XPON analog 3.3V power
C23	AVDDK_PON	P	XPON analog core power
A20, C20, C21, C22	AVSSK_PON	P	XPON analog core ground
B22	PON_TXP	A	PON analog transmit differential signal - positive
B23	PON_TXN	A	PON analog transmit differential signal – negative
A21	PON_RXP	A	PON analog receive differential signal – positive
B21	PON_RXN	A	PON analog receive differential signal – negative
AA15	PON_RX_DIS	IO	Disable PON receive signal
AA14	PON_TX_FAULT	IO	PON transmit fault

This document contains information that is proprietary to EcoNet (HK) Limited Taiwan Branch.
Unauthorized reproduction or disclosure of this information in whole or in part is strictly prohibited.

Pin	Name	Type*	Description
D19	PON_BURST_EN	IO	Burst enable (single-end)
C19	PON_RX_SD	IO	Detected PON received signal
AC15	PON_TX_DIS	IO	Disable PON transmit
AB15	PON_TX_SD	IO	Detected PON transmit signal
Giga-Ethernet interface			
B17	TXVP_A_P0	A	GE Port 0 pair A differential signal positive
C17	TXVN_A_P0	A	GE Port 0 pair A differential signal negative
B16	TXVP_B_P0	A	GE Port 0 pair B differential signal positive
C16	TXVN_B_P0	A	GE Port 0 pair B differential signal negative
B15	TXVP_C_P0	A	GE Port 0 pair C differential signal positive
C15	TXVN_C_P0	A	GE Port 0 pair C differential signal negative
B14	TXVP_D_P0	A	GE Port 0 pair D differential signal positive
C14	TXVN_D_P0	A	GE Port 0 pair D differential signal negative
B13	TXVP_A_P1	A	GE Port 1 pair A differential signal positive
C13	TXVN_A_P1	A	GE Port 1 pair A differential signal negative
B12	TXVP_B_P1	A	GE Port 1 pair B differential signal positive
C12	TXVN_B_P1	A	GE Port 1 pair B differential signal negative
B11	TXVP_C_P1	A	GE Port 1 pair C differential signal positive
C11	TXVN_C_P1	A	GE Port 1 pair C differential signal negative
B10	TXVP_D_P1	A	GE Port 1 pair D differential signal positive
C10	TXVN_D_P1	A	GE Port 1 pair D differential signal negative
B9	TXVP_A_P2	A	GE Port 2 pair A differential signal positive
C9	TXVN_A_P2	A	GE Port 2 pair A differential signal negative
B8	TXVP_B_P2	A	GE Port 2 pair B differential signal positive
C8	TXVN_B_P2	A	GE Port 2 pair B differential signal negative
B7	TXVP_C_P2	A	GE Port 2 pair C differential signal positive
C7	TXVN_C_P2	A	GE Port 2 pair C differential signal negative
B6	TXVP_D_P2	A	GE Port 2 pair D differential signal positive
C6	TXVN_D_P2	A	GE Port 2 pair D differential signal negative
B5	TXVP_A_P3	A	GE Port 3 pair A differential signal positive
C5	TXVN_A_P3	A	GE Port 3 pair A differential signal negative
B4	TXVP_B_P3	A	GE Port 3 pair B differential signal positive
C4	TXVN_B_P3	A	GE Port 3 pair B differential signal negative
B3	TXVP_C_P3	A	GE Port 3 pair C differential signal positive
C3	TXVN_C_P3	A	GE Port 3 pair C differential signal negative
B2	TXVP_D_P3	A	GE Port 3 pair D differential signal positive
B1	TXVN_D_P3	A	GE Port 3 pair D differential signal negative
C1	GBE_REXT	A	GE PHY external resistance
F7, F8, F9, F10	AVDDK_GBE	P	GE PHY Analog core power
E5, E8, E9, E12, E13	AVDD33_GBE	P	GE PHY Analog 3.3V power

This document contains information that is proprietary to EcoNet (HK) Limited Taiwan Branch.
Unauthorized reproduction or disclosure of this information in whole or in part is strictly prohibited.

Pin	Name	Type*	Description
DDR(both KGD and non-KGD package)			
E20	NC_E20	A	DRAM KGD output driving calibration, not connected for non-KGD package
E19	NC_E19	A	DRAM KGD reference voltage, not connected for non-KGD package
V17	DDR_RTN	A	DDR I/O driving calibration
H17, J17	VCCK_DDR	P	DDR core power
T17	AVDD33_RDDR	P	DDR analog core power
N17	AVDD15_DDR_CK	P	DDR analog 1.5V power
K17, L17, M17	AVDD15_DDR_DQ	P	DDR analog 1.5V power
P17, R17	AVDD15_DDR_CA	P	DDR analog 1.5V power
DDR (non-KGD package only)			
W16	VREFDQ	A	DDR DQ reference voltage
W15	VREFCA	A	DDR CA reference voltage
V18	DDR_RTP	A	Reserved
W21	DDR_RESETB	O	DDR reset
P21	RODT	O	DDR I/O On Die Termination
G19	DQS0	IO	DRAM data strobe for DQ0~7 Differential positive
G20	DQSB0	IO	DRAM data strobe for DQ0~7 Differential negative
J19	DQS1	IO	DRAM data strobe for DQ8~15 Differential positive
J20	DQSB1	IO	DRAM data strobe for DQ8~15 Differential negative
H21	DQM0	O	DRAM data mask for write command, DQM0: for DQ0~7
J22	DQM1	O	DRAM data mask for write command, DQM1 for DQ8~15
L19	CLK	O	DDR differential clock positive
L20	CLKB	O	DDR differential clock negative
M22	DQ0	IO	DRAM data bus bit 0
E22	DQ1	IO	DRAM data bus bit 1
M21	DQ2	IO	DRAM data bus bit 2
E21	DQ3	IO	DRAM data bus bit 3
P23	DQ4	IO	DRAM data bus bit 4
D22	DQ5	IO	DRAM data bus bit 5
N21	DQ6	IO	DRAM data bus bit 6
D23	DQ7	IO	DRAM data bus bit 7
G21	DQ8	IO	DRAM data bus bit 8

This document contains information that is proprietary to EcoNet (HK) Limited Taiwan Branch.
Unauthorized reproduction or disclosure of this information in whole or in part is strictly prohibited.

Pin	Name	Type*	Description
L22	DQ9	IO	DRAM data bus bit 9
F22	DQ10	IO	DRAM data bus bit 10
L21	DQ11	IO	DRAM data bus bit 11
H23	DQ12	IO	DRAM data bus bit 12
K22	DQ13	IO	DRAM data bus bit 13
F21	DQ14	IO	DRAM data bus bit 14
K23	DQ15	IO	DRAM data bus bit 15
V21	RA0	O	DRAM address bus bit 0
V19	RA1	O	DRAM address bus bit 1
V22	RA2	O	DRAM address bus bit 2
T22	RA3	O	DRAM address bus bit 3
AB21	RA4	O	DRAM address bus bit 4
U22	RA5	O	DRAM address bus bit 5
AB22	RA6	O	DRAM address bus bit 6
U21	RA7	O	DRAM address bus bit 7
AB23	RA8	O	DRAM address bus bit 8
Y23	RA9	O	DRAM address bus bit 9
AA20	RA10	O	DRAM address bus bit 10
U19	RA11	O	DRAM address bus bit 11
AB20	RA12	O	DRAM address bus bit 12
Y21	RA13	O	DRAM address bus bit 13
V20	RA14	O	DRAM address bus bit 14
U20	RA15	O	DRAM address bus bit 15
N19	RCS	O	DRAM chip selection
P19	RRAS	O	DRAM row address strobe
P20	RCAS	O	DRAM column address strobe
AA22	RWE	O	DRAM write enable
R22	RBA0	O	DRAM bank address bus bit 0
AC21	RBA1	O	DRAM bank address bus bit 1
T23	RBA2	O	DRAM bank address bus bit 2
N20	RCKE	O	Clock enable
BGPOR			
W8, W9, W10, W11	AVDD33_BGPOR	P	BGPOR analog 3.3V power
AA7, AA9, AB9, AC9	AVSS33_BGPOR	G	BGPOR analog 3.3V ground
AC7	BGPOR_TN	IO	Band gap pin for strap
AB7	BGPOR_TP	IO	Band gap pin for strap
AA6	BGPOR_DGINP	I	Dying gasp
GPIO			
*****	GPIO*	IO	General IO
EFUSE			

This document contains information that is proprietary to EcoNet (HK) Limited Taiwan Branch.
Unauthorized reproduction or disclosure of this information in whole or in part is strictly prohibited.

Pin	Name	Type*	Description
C18	EFUSE	A	EFUSE pin
Misc.			
V1	HW_RSTN	I	Chip reset, active low
AB6	AVSMON	A	AVS pin
A18	REF_CKO	O	Clock output, refer to 4.4 boot strap pin
E16	AVDD33_CKO	P	Analog power for clock output
Power and Ground			
*	VCCK	P	Core power
G5, G6, G15, G16, V16	DVDD33	P	Digital IO 3.3V power
*	GND	G	Ground

NOTE:

I	:	Input
O	:	Output
IO	:	Bi-directional
P	:	Power
G	:	Ground
A	:	analog pin

This document contains information that is proprietary to EcoNet (HK) Limited Taiwan Branch.
Unauthorized reproduction or disclosure of this information in whole or in part is strictly prohibited.

4.3 Pin Sharing Schemes

4.3.1 JTAG Sharing Scheme

Table 4-2 JTAG Pin Sharing Scheme

Pin Name	GPIO Mode	JTAG Mode Software Enable
GPIO24	GPIO24	**JTMS_I: JTAG TMS input**
GPIO26	GPIO26	**JTRST_I: JTAG reset input**
GPIO22	GPIO22	**JTCLK_I: JTAG clock input**
GPIO23	GPIO23	**JTDI_I: JTAG TDI input**
GPIO25	GPIO25	**JTDO_O: JTAG TDO output**

4.3.2 SLIC ZSI/ISI Sharing Scheme

Table 4-3 ZSI Pin Sharing Scheme

Pin Name	GPIO Mode	ZSI Mode Software Enable
GPIO4	GPIO4	**ZSYNC2: 2nd ZSI interface Synchronization**
GPIO5	GPIO5	**ZCLK2: 2nd ZSI interface Clock**
GPIO6	GPIO6	**ZMOSI2: 2nd ZSI interface data output**
GPIO7	GPIO7	**ZMISO2: 2nd ZSI interface data input**
ZSYNC	GPIO12	**ZSYNC: 1st ZSI interface Synchronization**
ZCLK	GPIO13	**ZCLK: 1st ZSI interface Clock**
ZMOSI	GPIO14	**ZMOSI: 1st ZSI interface data output**
ZMISO	GPIO15	**ZMISO: 1st ZSI interface data input**

Table 4-4 ISI Pin Sharing Scheme

Pin Name	GPIO Mode	ISI Mode Software Enable
GPIO4	GPIO4	**IRESET2: 2nd ISI interface Reset**
GPIO5	GPIO5	**ICLK2: 2nd ISI interface Clock**
GPIO6	GPIO6	**IMOSI2: 2nd ISI interface data output**
GPIO7	GPIO7	**IMISO2: 2nd ISI interface data input**
ZSYNC	GPIO12	**IRESET1: 1st ISI interface Reset**
ZCLK	GPIO13	**ICLK1: 1st ISI interface Clock**
ZMOSI	GPIO14	**IMOSI1: 1st ISI interface data output**
ZMISO	GPIO15	**IMISO1: 1st ISI interface data input**

© EcoNet (HK) Limited Taiwan Branch.

This document contains information that is proprietary to EcoNet (HK) Limited Taiwan Branch.
Unauthorized reproduction or disclosure of this information in whole or in part is strictly prohibited.

4.3.3 PCM Sharing Scheme

Table 4-5 PCM Pin Sharing Scheme

Pin Name	GPIO Mode	PCM Mode Software Enable
ZSYNC	GPIO12	**PCM_FS: PCM Frame Synchronization**
ZCLK	GPIO13	**PCM_CLK: PCM Clock**
ZMOSI	GPIO14	**PCM_TXD: PCM Transmit data**
ZMISO	GPIO15	**PCM_RXD: PCM Receive data**
GPIO2	GPIO2	**PCM_RESET: PCM reset**
GPIO3	GPIO3	**PCM_INT: PCM interrupt**

Table 4-6 SLIC SPI Pin Sharing Scheme

Pin Name	GPIO Mode	PCM Mode Software Enable
GPIO4	GPIO4	**SLIC_SPI_CS0: SLIC I interface Chip Select 0**
GPIO5	GPIO5	**SLIC_SPI_CLK: SLIC interface Clock Output**
GPIO6	GPIO6	**SLIC_SPI_MOSI: SLIC interface Data Pin**
GPIO7	GPIO7	**SLIC_SPI_MISO: SLIC interface Data Pin**
GPIO10	GPIO10	**SLIC_SPI_CS1: SLIC I interface Chip Select 1**
GPIO27	GPIO27	**SLIC_SPI_CS2: SLIC I interface Chip Select 2**
GPIO8	GPIO8	**SLIC_SPI_CS3: SLIC I interface Chip Select 3**
GPIO11	GPIO11	**SLIC_SPI_CS4: SLIC I interface Chip Select 4**

4.3.4 UART Sharing Scheme

Table 4-7 UART Pin Sharing Scheme

Pin Name	GPIO Mode	UART Mode Software Enable
GPIO8	GPIO8	**UART2_TXD: 2nd UART TXD**
GPIO9	GPIO9	**UART2_RXD: 2nd UART RXD**

4.3.5 SMI Sharing Scheme

Table 4-8 SMI Pin Sharing Scheme

Pin Name	GPIO Mode	SMI Mode Software Enable
GPIO8	GPIO8	**MDC**
GPIO9	GPIO9	**MDIO**

© EcoNet (HK) Limited Taiwan Branch.

This document contains information that is proprietary to EcoNet (HK) Limited Taiwan Branch.
Unauthorized reproduction or disclosure of this information in whole or in part is strictly prohibited.

4.3.6 PCIe Interface Sharing Scheme

Table 4-9 PCIe Pin Sharing Scheme

Pin Name	GPIO Mode Software Enable	PCIE mode Software Enable
PCIE_RESET0	GPIO28	**PCIE_RESET0: PCIE port0 reset**
PCIE_RESET1	GPIO29	**PCIE_RESET1: PCIE port1 reset**

4.3.7 Serial GPIO Interface Sharing Scheme

Table 4-10 SIPO Pin Sharing Scheme

Pin Name	GPIO Mode	SIPO mode Software Enable
GPIO18	GPIO18	**SIPO_RCLK: Serial GPIO mode latch clock for 74X595**
GPIO1	GPIO1	**SIPO_SCLK: Serial GPIO mode shift clock for 74X164/74X595**
GPIO26	GPIO26	**SIPO_DATA: Serial GPIO mode data for 74X164/74X595**

4.3.8 LED Interface Sharing Scheme

Table 4-11 LED Pin Sharing Scheme

Pin Name	GPIO Mode	LED mode Software Enable
GPIO22	GPIO22	**LAN0 LED 0**
GPIO23	GPIO23	**LAN1 LED 0**
GPIO24	GPIO24	**LAN2 LED 0**
GPIO25	GPIO25	**LAN3 LED 0**
GPIO7	GPIO7	**LAN0 LED 1**
GPIO6	GPIO6	**LAN1 LED 1**
GPIO5	GPIO5	**LAN2 LED 1**
GPIO4	GPIO4	**LAN3 LED 1**

4.3.9 I2C Slave Interface Sharing Scheme

Table 4-12 I2C Slave Pin Sharing Scheme

Pin Name	GPIO Mode	I2C slave mode Software Enable
GPIO2	GPIO2	**I2C slave mode SCL**
GPIO3	GPIO3	**I2C slave mode SDA**

This document contains information that is proprietary to EcoNet (HK) Limited Taiwan Branch.
Unauthorized reproduction or disclosure of this information in whole or in part is strictly prohibited.

4.4 Boot Strap Pins Definition

Table 4-13 Strap Pins Definition

Pin Name	Internal Pull	Description
{SPI_CLK, SPI_MISO,UART_TXD}	Internal Pull Up	Boot mode selection 000: SPI NOR 4B mode 001: SPI NOR 3B mode 010: Reserved 011: SPI NAND dummy append(default) 100: Reserved 101: Reserved 110: iNIC mode 111: Reserved
{SPI_CS, I2C_SCL}	Internal Pull Up	00: don't use 01: don't use 10: don't use 11: normal mode(default)
{BGPOR_TP, BGPOR_TN}		00: 25MHz XTAL mode, REF_CKO = 25MHz 01: 40MHz XTAL mode, REF_CKO = 20MHz 10: 25MHz current mode, REF_CKO =25MHz 11: 40MHz current mode, REF_CKO =20MHz when 10 or 11, XTAL pad will power down

© EcoNet (HK) Limited Taiwan Branch.

This document contains information that is proprietary to EcoNet (HK) Limited Taiwan Branch.
Unauthorized reproduction or disclosure of this information in whole or in part is strictly prohibited.

5 Maximum Ratings and Operating Conditions

5.1 Absolute Maximum Ratings

Core Supply Voltage	1.4V
DDR Supply Voltage	1.8V
3.3V Supply Voltage	4.0V
Vcc to Vcc Decouple	–0.3 V to +0.3 V
Input, Output, or I/O Voltage	GND -0.3 V to Vcc +0.3 V

5.2 Operating Conditions

Ambient Temperature Range	-20 to 70 °C
Core Supply Voltage	1.15V +/- 5%
DDR Supply Voltage	1.35V +/- 0.068V
3.3V I/O Supply Voltage	3.3 V +/- 5%

This document contains information that is proprietary to EcoNet (HK) Limited Taiwan Branch.
Unauthorized reproduction or disclosure of this information in whole or in part is strictly prohibited.

5.3 Thermal Information

Without DRAM KGD in package

Maximum Junction Temperature (Plastic Package)	125°C
Maximum Lead Temperature (Soldering 10s)	260°C

Thermal characteristics when stationary, without an external heat sink in an air-conditioned environment:

Thermal Resistance θJA (°C /W) for JEDEC 2L system PCB 19.85 °C/W

Thermal Resistance θJA (°C /W) for JEDEC 4L system PCB 18.12 °C/W

Thermal Resistance θJC (°C /W) for JEDEC system PCB 7.19 °C/W

Thermal Resistance θJB (°C /W) for JEDEC system PCB 5.93 °C/W

Thermal Characterization parameter ΨJt (°C /W) for JEDEC 2L system PCB 0.26 °C/W

Thermal Characterization parameter ΨJt (°C /W) for JEDEC 4L system PCB 0.24 °C/W

NOTE: JEDEC 51-9 system FR4 PCB size: 101.5mmx114.5mm

Without DRAM KGD in package

TBD

This document contains information that is proprietary to EcoNet (HK) Limited Taiwan Branch.
Unauthorized reproduction or disclosure of this information in whole or in part is strictly prohibited.

5.4 Storage Conditions

The calculated shelf life in a sealed bag is 12 months if stored between 0 °C and 40 °C at less than 90% relative humidity (RH). After the bag is opened, devices that are subjected to solder reflow or other high temperature processes must be handled by the following manner:

- Mounted within 168 hours of factory conditions, i.e. < 30 °C at 60% RH.
- For storage humidity, maintain at < 10% RH.
- Baking is necessary if the customer exposes the component to air for over 168 hrs; baking conditions: 125 °C for 24 hrs.

© EcoNet (HK) Limited Taiwan Branch.

This document contains information that is proprietary to EcoNet (HK) Limited Taiwan Branch.
Unauthorized reproduction or disclosure of this information in whole or in part is strictly prohibited.

5.5 DC Electrical Characteristics

5.5.1 Supply Voltage and Current Consumption

Table 5-1 Supply Voltage and Current Consumption

Parameter	Sym	Conditions	Min	Typ	Max	Unit
3.3V Current Consumption	ICC33	3.3V current		233	348	mA
DDR Current Consumption	ICC15	DDR current		46	114	mA
Core Current Consumption	ICCK	Core current		978	1830	mA
Total Power Consumption	P			1.96	3.41	W

Note:

The maximum power consumption is defined under the condition: room temperature = 70°C, all interfaces are in busy state.

The typical power consumption is defined under the condition: room temperature = 25°C, all interfaces have typical application.

5.5.2 3.3V I/O DC Characteristics

Table 5-2 3.3V I/O DC Characteristics

Parameter	Sym	Min	Typ	Max	Unit
Input logic high voltage	V_{IH}	2.0		VCC33+0.3	V
Input logic low voltage	V_{IL}	-0.3		0.8	V
DC Output logic high voltage	V_{OH}(DC)	VCC33-0.4		VCC33+0.3	V
DC Output logic low voltage	V_{OL}(DC)	-0.3		0.4	V

This document contains information that is proprietary to EcoNet (HK) Limited Taiwan Branch.
Unauthorized reproduction or disclosure of this information in whole or in part is strictly prohibited.

5.5.3 DDR3 I/O DC Characteristics

Table 5-3 DDR I/O DC characteristics

Parameter	Sym	Min	Typ	Max	Unit
DC Input logic high voltage	V_{IH}(DC)	VREF+0.1		VCC15	V
DC Input logic low voltage	V_{IL}(DC)	GNDIO		VREF-0.1	V
AC Input logic high voltage	V_{IH}(AC)	VREF+0.175		N/A	V
AC Input logic low voltage	V_{IL}(AC)	N/A		VREF-0.175	V
Reference voltage	VREF	0.49x VCC15	0.50x VCC15	0.51x VCC15	V
DC Input differential voltage	V_{ID}(DC)	0.2		N/A	V
AC Input differential voltage	V_{ID}(AC)	0.35		N/A	V
AC Input differential voltage crossing point	V_{IX}(AC)	0.5x VCC15-0.15		0.5x VCC15 +0.15	V
DC Output logic high voltage	V_{OH}(DC)	0.8x VCC15			V
DC Output logic low voltage	V_{OL}(DC)			0.2x VCC15	V
ODT Rtt Values	Rtt		20/30/40/60/120		Ohm

This document contains information that is proprietary to EcoNet (HK) Limited Taiwan Branch.
Unauthorized reproduction or disclosure of this information in whole or in part is strictly prohibited.

5.6 AC Electrical Characteristics

5.6.1 SPI Interface Signal Timing

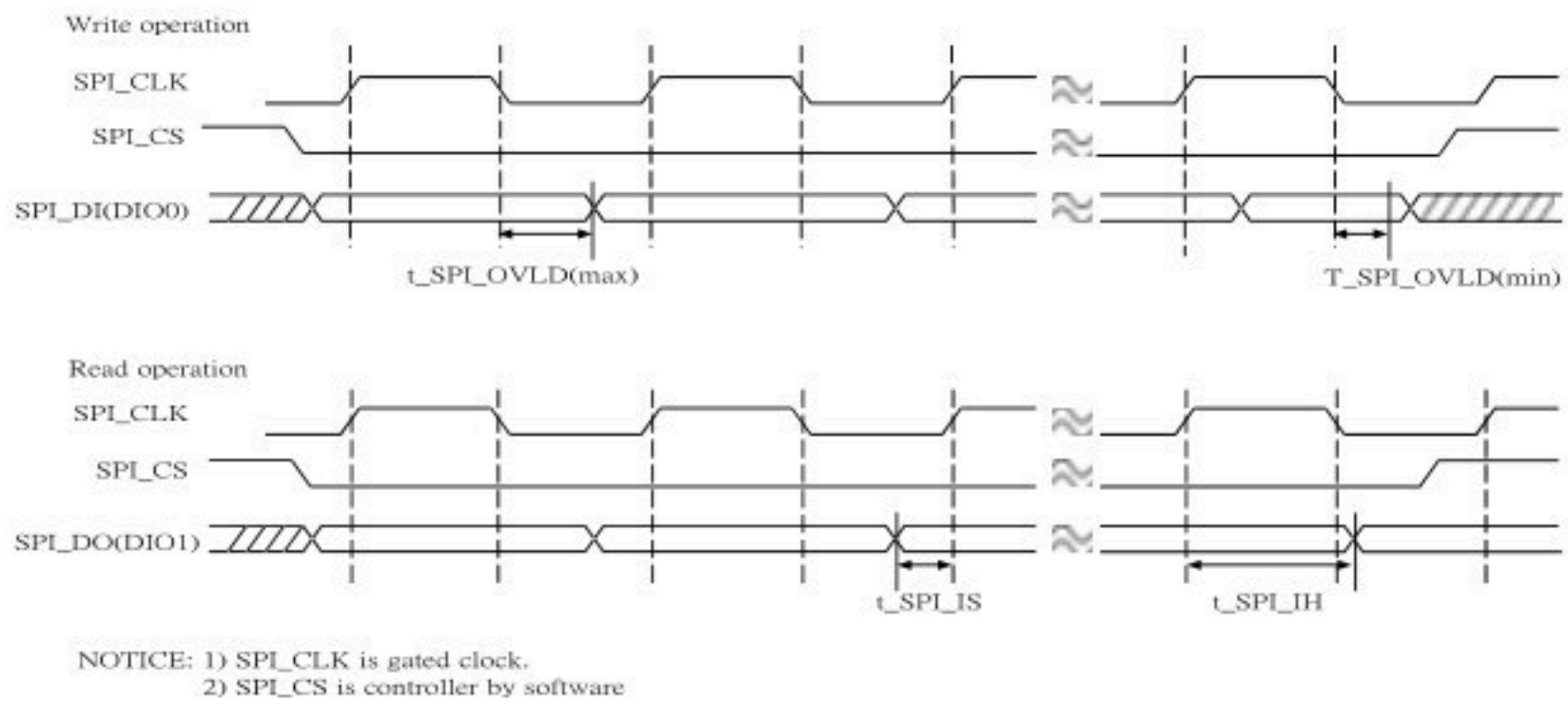

Figure 5-1 SPI Timing Diagram

Table 5-4 SPI Interface Timing

Parameter	Description	Min	Typ	Max	Unit	Remark
t_SPI_IS	Setup time for SPI input	5			ns	
t_SPI_IH	Hold time for SPI input	0			ns	
t_SPI_OVLD	SPI_CLK to SPI output valid			15	ns	
SPI_CLK Frequency	SPI_CLK Frequency	1.62		50	MHz	

This document contains information that is proprietary to EcoNet (HK) Limited Taiwan Branch.
Unauthorized reproduction or disclosure of this information in whole or in part is strictly prohibited.

5.6.2 MDC/MDIO Interface Signal Timing

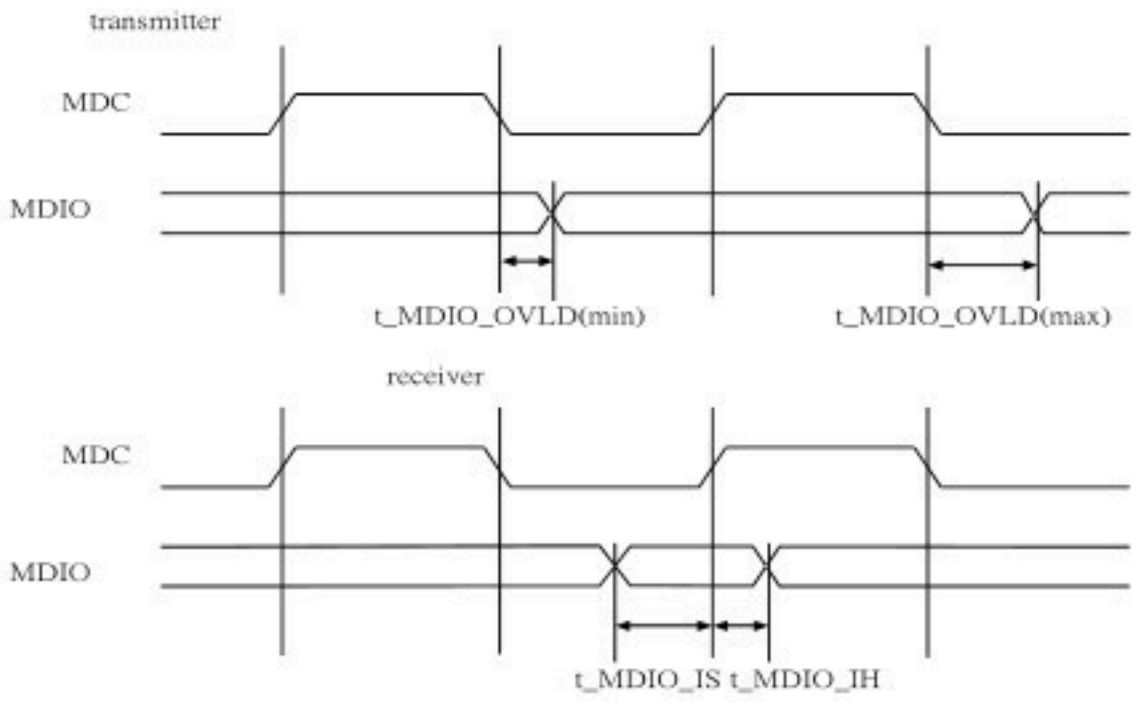

Figure 5-2 MDC/MDIO Timing Diagram

Table 5-5 MDC/MDIO Interface Timing

Parameter	Description	Min	Typ	Max	Unit	Remark
t_MDIO_IS	Setup time for MDIO input	10			ns	
t_MDIO_IH	Hold time for MDIO input	0			ns	
t_MDIO_OVLD	MDC to MDIO output valid			5	ns	

This document contains information that is proprietary to EcoNet (HK) Limited Taiwan Branch.
Unauthorized reproduction or disclosure of this information in whole or in part is strictly prohibited.

5.6.3 PCM Interface Timing

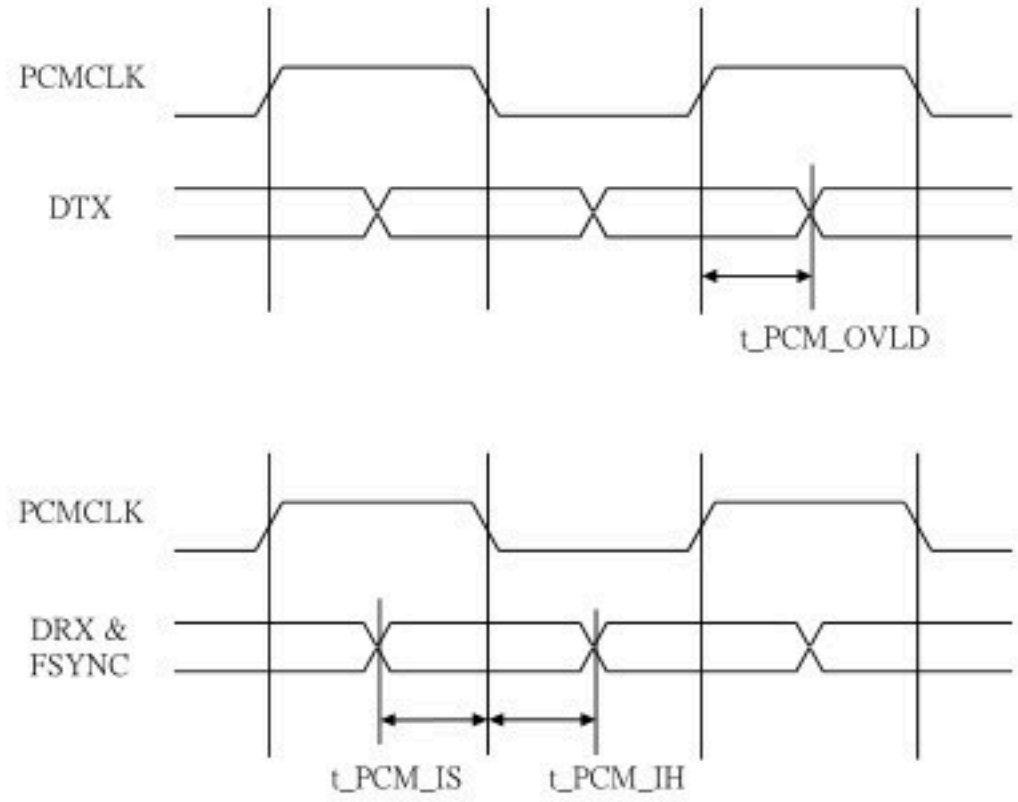

Figure 5-3 PCM Interface Timing Diagram

Table 5-6 PCM Interface Timing

Parameter	Description	Min	Typ	Max	Unit	Remark
t_PCM_IS	Setup time for PCM input to PCM_CLK fall	10			ns	
t_PCM_IH	Hold time for PCM input to PCM_CLK fall	0			ns	
t_PCM_OVLD	PCM_CLK rise to PCM output valid	0			ns	

This document contains information that is proprietary to EcoNet (HK) Limited Taiwan Branch.
Unauthorized reproduction or disclosure of this information in whole or in part is strictly prohibited.

5.6.4 I2C Interface Signal Timing

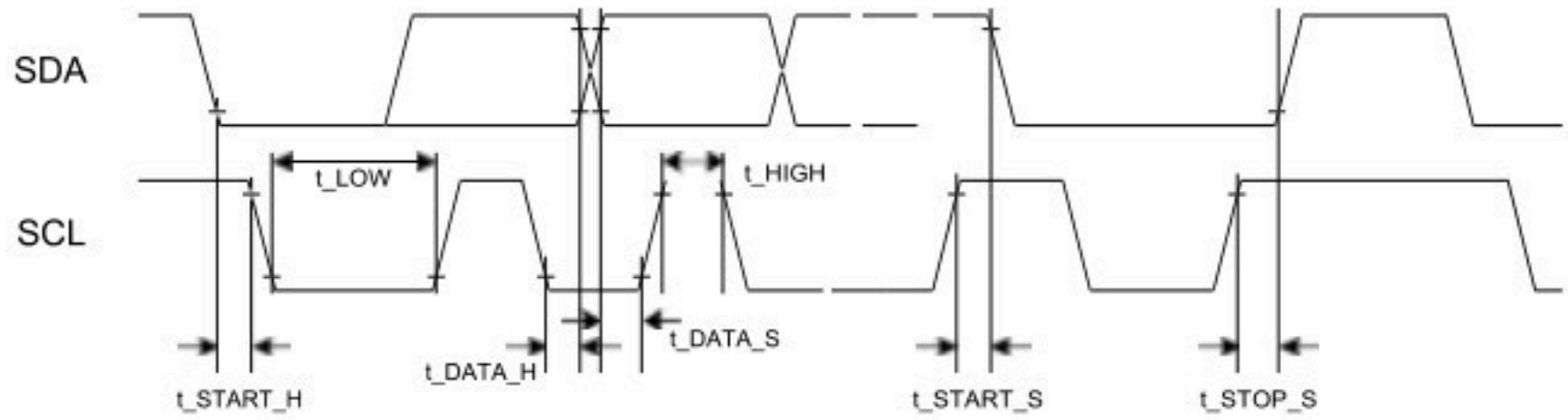

Figure 5-4 I2C Interface Timing Diagram

Table 5-7 I2C Interface Timing

Parameter	Description	Min	Typ	Max	Unit	Remark
f_SCL	SCL clock frequency	4.8	100	1818	KHz	
t_START_S	Setup time for START	550			ns	
t_START_H	Hold time for START	550			ns	
t_STOP_S	Setup time for STOP	300			ns	
t_DATA_S	Setup time for DATA	50			ns	
t_DATA_H	Hold time for DATA	150			ns	
t_HIGH	SCL High time	350			ns	
t_LOW	SCL Low time	200			ns	

This document contains information that is proprietary to EcoNet (HK) Limited Taiwan Branch.
Unauthorized reproduction or disclosure of this information in whole or in part is strictly prohibited.

5.6.5 Crystal Specification

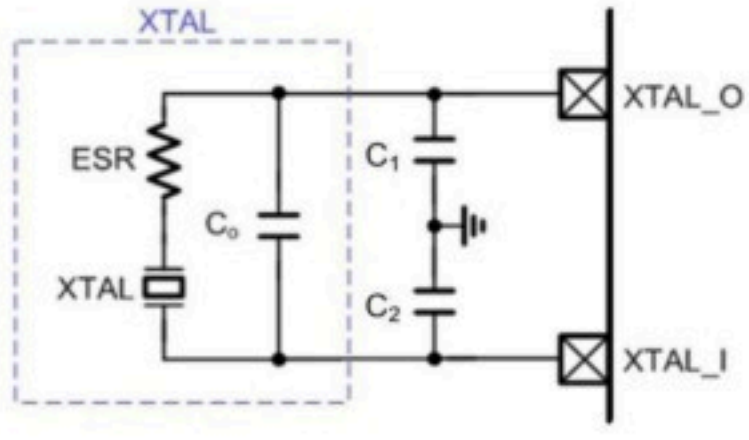

Figure 5-5 Crystal Circuit Diagram

Table 5-8 Crystal Specification

Item	Symbol	Specifications	Units	Notes
Nominal Frequency	Fn	25	MHz	
Mode of Oscillation	MO	Fundamental		
Calibration Load Capacitance	CL	12~32	pF	
Calibration Tolerance	FL	<±30	ppm	At 250C±30C
Operating Temperature Range	TR	-10 to +85	0C	
Frequency Stability				
(Frequency Deviation over the Operating Temperature Range)	F/T	<±30	ppm	Reference to the Frequency at 250C
Operating Drive Level		>100	µW	
Maximum Drive Level		>500	µW	
Equivalent Series Resistance	ESR	<30	Ohm	
Shunt Capacitance	C0	<5	pF	
Aging at 250C		<±3	ppm	1st year
Storage Temperature		-55 to +125	0C	

This document contains information that is proprietary to EcoNet (HK) Limited Taiwan Branch.
Unauthorized reproduction or disclosure of this information in whole or in part is strictly prohibited.

This document contains information that is proprietary to EcoNet (HK) Limited Taiwan Branch.
Unauthorized reproduction or disclosure of this information in whole or in part is strictly prohibited.

6 Packaging Physical Dimensions

6.1 LFBGA361 (15mm x 15mm x 1.4mm)

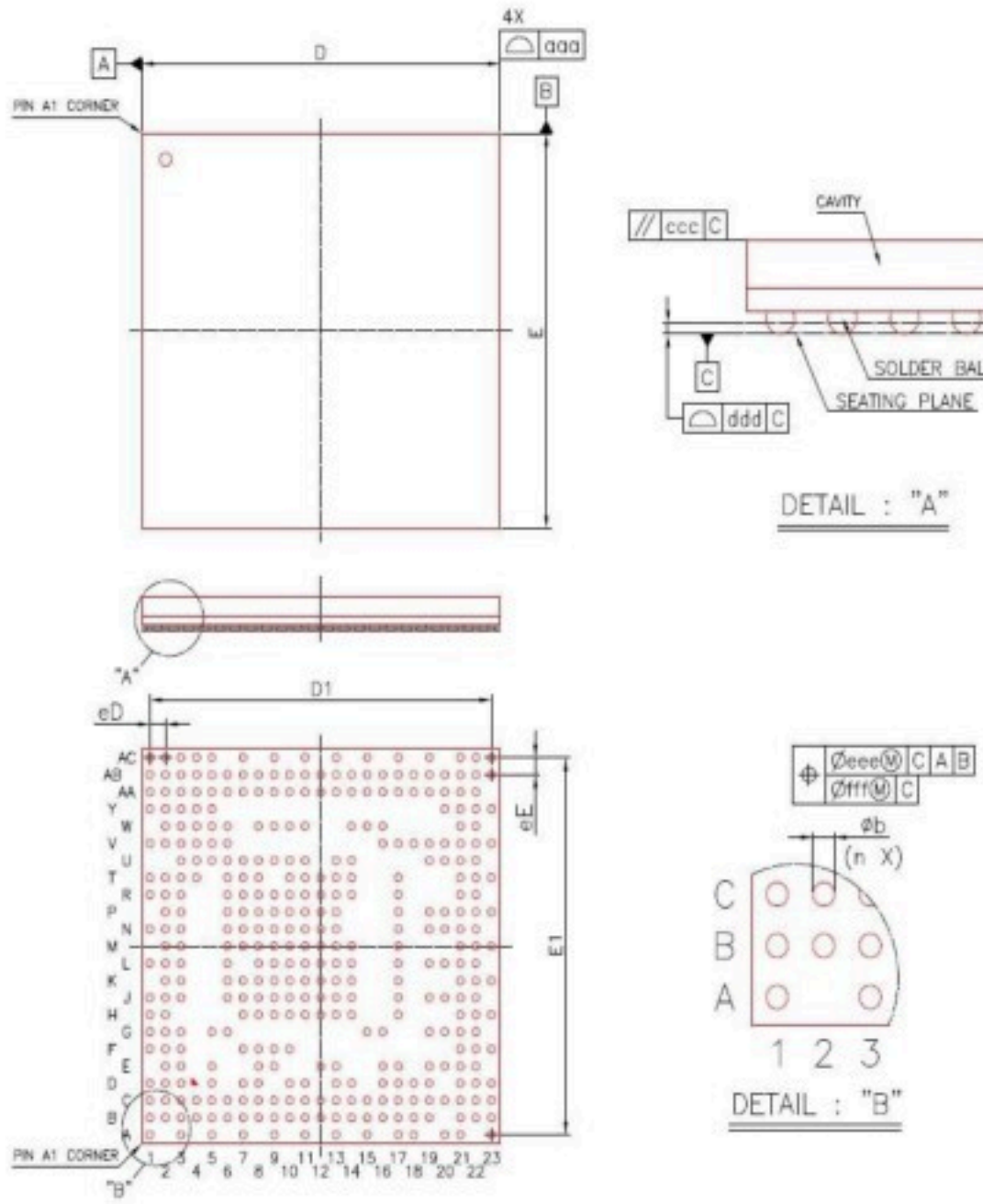

Item		Symbol	Common Dimensions MIN.	NOM.	MAX.
Package Type			LFBGA		
Body Size	X	D	14.95	15.00	15.05
	Y	E	14.95	15.00	15.05
Ball Pitch	X	eD	0.65		
	Y	eE	0.65		
Total Thickness		A	----	----	1.40
Mold Thickness		A3	0.70 Ref.		
Substrate Thickness		A2	0.36 Ref.		
Substrate+Mold Thickness		A4	1.00	1.06	1.12
Ball Diameter			0.30		
Stand Off		A1	0.16	0.21	0.26
Ball Width		b	0.25	0.30	0.35
Package Edge Tolerance		aaa	0.05		
Mold Flatness		ccc	0.15		
Coplanarity		ddd	0.10		
Ball Offset (Package)		eee	0.15		
Ball Offset (Ball)		fff	0.08		
Ball Count		n	361		
Edge Ball Center to Center	X	D1	14.30		
	Y	E1	14.30		
Edge Ball Center to Package Edge	X	gD	0.35		
	Y	gE	0.35		

Figure 6-1 Package Outline Diagram

This document contains information that is proprietary to EcoNet (HK) Limited Taiwan Branch.
Unauthorized reproduction or disclosure of this information in whole or in part is strictly prohibited.

7 Ordering Information

Part Number	Temp Range	Packaging (Green/RoHS Compliant)	Note
EN7529CT	-20 to 70 ℃	LFBGA361 (15mm x 15mm x 1.4mm)	Without DRAM KGD
EN7529CT/DA	-20 to 70 ℃	LFBGA361 (15mm x 15mm x 1.4mm)	D: MCM DDR3 256MB KGD
EN7529CT/EA	-20 to 70 ℃	LFBGA361 (15mm x 15mm x 1.4mm)	E: MCM DDR3 512MB KGD

This document contains information that is proprietary to EcoNet (HK) Limited Taiwan Branch.
Unauthorized reproduction or disclosure of this information in whole or in part is strictly prohibited.

8 History

V1.0: Initial version

V1.1: Update thermal information

V1.2: Update thermal information for 2L and 4L PCB

V1.3: Update AA17 ball description

© EcoNet (HK) Limited Taiwan Branch.

This document contains information that is proprietary to EcoNet (HK) Limited Taiwan Branch.
Unauthorized reproduction or disclosure of this information in whole or in part is strictly prohibited.